PRODUCT BRIEF

Intellian® i4/i4P

Most Popular Size
Marine Satellite TV Antenna System

Intellian® i4/i4P As the most popular size for all types of boats, the Intellian i4/i4P provides higher performance to stay locked-on and connect boaters to HD satellite TV entertainment, while vessel is cruising in rough sea conditions. The i4's stylish and polished dome design makes a perfect fit for boats over 50 feet.

- **Standard Size for US nationwide Coverage**
- **Powerful Performance with Competitive Value**
- **Auto Skew Angle Control System for Linear Polarization - i4P only**
- **Seamless Viewing (Automatic Satellite Switch) of All DISH Network and Bell TV Channels.**

  Available with DISH MIM (Multi-satellite Interface Multi-switch)

HDTV COMPATIBLE

3 YEAR GLOBAL WARRANTY

Popular Size with Higher Performance
18 inch dish diameter with nationwide coverage for North America, Europe and the regional service around the globe.

Faster Signal Acquisition
Intellian's exclusive Wide Range Search (WRS) algorithm allows the antenna to search, find and lock on to a signal with incredible speed and accuracy.

A Firm Hold on the Signal
Intellian's exclusive Dynamic Beam Tilting (DBT) uses a high performance, constantly adjusting sub-reflector which allows the antenna to remain the strongest signal at all times while the vessel is cruising at high speed.

Simple & Easy Installation
With a single cable to connect the antenna and the ACU, Intellian i4 systems are quick and easy to install. Our advanced ACU is designed to require minimum setup so you can begin to enjoy TV programs aboard your boat in no time.

Tune in Your Favorite HDTV Channels
Intellian's i4/i4P provides HD channels from the Ku-band. The HD module is built-in to the Antenna Control Unit of the Intellian i4 for seamless integration and easy installation.

Built-in GPS
Intellian i4/i4P includes a built-in GPS for easier operation and faster signal acquisition. It allows the i4/i4P to have higher accuracy and easy operation wherever the vessel sails.

User-friendly Operation
Antenna Control Unit (ACU), which is supplied as a default package, gives you the user-friendly operation for various function.

Intellian®

Intellian® i4/i4P

Compact but Powerful Marine Satellite TV Antenna System

Key Features

Fully Automated System
Automatic satellite search and identification. 2-axis step motors to stabilize the pedestal.

Enhanced Antenna
Highly efficient parabolic antenna enables 49dBW of minimum EIRP.
RHCP / LHCP, Vertical / Horizontal polarization

Most Popular Size
18 inch antenna dish diameter. Light antenna weighs less than 26 pounds

Wide Range Search (WRS) Algorithm
Competitor methods search for the narrow-bandwidth of the main lobe. However Intellian's exclusive WRS searches for the wide range of side lobes and jumps up to the main lobe, providing faster satellite acquisition.

Dynamic Beam Tilting (DBT) Technology
A high-speed sub-reflector rotates off axis, checking signal strength at 50 times per second and compensating the tracking direction.
Less movement of the main-reflector means less noise and extends the product life.

Fully Automated Digital Video Broadcasting (DVB) Identification
DVB Decoder with CPLD enables high speed identification.

New Type Antenna Control Unit
Easy to change and update satellite information.
Easy antenna status check and automatic diagnosis.
Easy antenna control using PC interface.

Built-in GPS and NMEA 0183 Interface Port
The i4/i4P includes a built-in GPS inside of the Antenna Unit for faster signal acquisition. The ship's GPS can also be connected through the NMEA 0183 port on the rear panel of the ACU.

Automatic Polarization (Skew-angle) Control (i4P only)
Automatic Skew Angle Control System (-90°~ +90°) for Linear Horizontal/ Vertical Polarization.

System Diagram

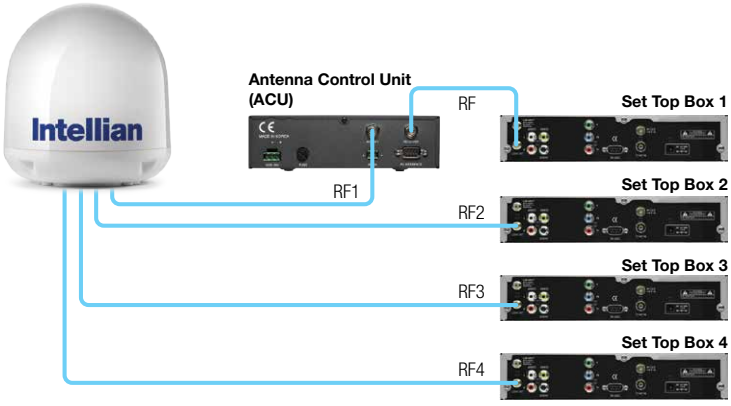

*Set Top Box is not supplied

Technical Specifications

Part	Specifications
B3-403S	Intellian i4 Satellite TV Antenna System (US)
B3-401Q	Intellian i4 Satellite TV Antenna System (Europe)
Physical	
Radome Height	21.2 in (54 cm)
Radome Diameter	19.7 in (50 cm)
Antenna Dish Diameter	17.7 in (45 cm)
Weight	25.5 lbs (11.6kg)
Environmental	
Operating Temp. Range	5ºF ~ 131ºF (-15ºC ~ 55ºC)
Storage Temp. Range	-13ºF ~ 158ºF (-25ºC ~ 70ºC)
Water Ingress	IPX6
Approvals	CE / FCC
Warranty	3 Years Parts and 1 Year Labor
Performance	
Reception Frequency	Ku-band (10.7~ 12.75 GHz)
Polarization	RHCP / LHCP, Vertical / Horizontal
Minimum EIRP	49 dBW
Azimuth Range	680º
Elevation Range	0º to +90º
Ship's Motion	Roll ±25º, Pitch ±15º
Roll & Pitch Response Rate	50º / Second
Turn Rate	50º / Second
RF Output	Dual / Quad Output
Antenna Control Unit	
Dimensions (WxDxH)	7.0 in x 8.5 in x 2.1 in (17.8 cm x 21.7 cm x 5.4 cm)
Weight	2.6 lbs (1.2 kg)
Display	2 Line 20 Character VFD Module
Control Key	5 Integrated Push Buttons
Power Input	9 ~ 30 VDC (Typ. 30W, Max. 50W)
GPS Interface	NMEA0183

Antenna Dimensions

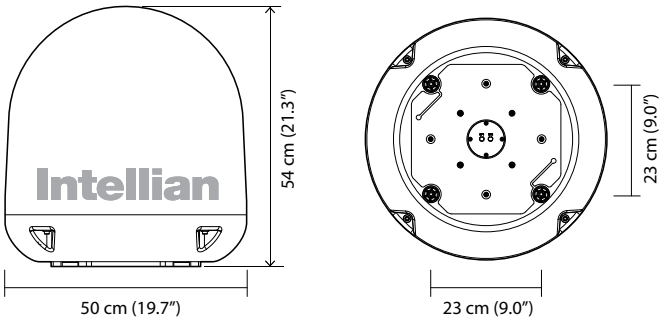

Intellian®
ISO 9001, 14001 Certified
www.intelliantech.com

HQ/Innovation Center/Factory
Intellian Technologies, Inc.
348-5 Chungho-Ri, Jinwi-Myeon
Pyeongtaek-Si, Gyunggi-Do 451-862 Korea
T +82 31 379 1000
F +82 31 377 6185

Seoul Office APAC
Intellian Technologies, Inc.
2F Dongik Building, 98 Nonhyun-Dong
Gangnam-Gu, Seoul 135-010 Korea
T +82 2 511 2244
F +82 2 511 2235

Irvine Office Americas
Intellian Technologies USA, Inc.
9004 Research Drive
Irvine, CA 92618 USA
T +1 949 727 4498
Toll Free +1 888-201-9223
F +1 949 271 4183

Rotterdam Office EMEA
Intellian B.V.
Bristolstraat 1, 3047AB
Rotterdam, The Netherlands
T +31 1 0820 8655
F +31 1 0820 8656

UK Office
Intellian Ltd.
Epsilon House, Enterprise Road,
Southampton Science Park,
Southampton, Hampshire SO16 7NS,UK
T +44 2380 019 021
F +44 2380 767 092

Intellian has more worldwide offices. Addresses, phone numbers, and fax numbers are listed on the Intellian Website at **www.intelliantech.com**

©2013 Intellian Technologies, Inc. All rights reserved. Intellian and the Intellian logo are registered trademarks. DBT, WRS, i4 and i-Series are trademarks of Intellian Technologies, Inc. in the U.S. and/or various countries.
All other trademarks are the property of their respective owners. Information in this document is subject to change without notice.

Part No. 2013F1F2-DS01110-V1_1